
# New Standard Mechanistic Model for Optimal Calcium Removal in Water Treatment: Optimization Strategies and Reactor Design Recommendations

This poster!!


Sergěj Y. M. H. Seepma,[ac] Janou A. Koskamp,[a] Michel G. Colin,[c] Eleftheria Chiou,[bc] Rubayat Sobhan,[bc] Tim Bögels,[ac] Tom Bastiaan,[ac] Hadi Zamanian,[c] Eric T. Baars,[c] Peter J. de Moel,[cd] Mariëtte Wolthers,[a] Onno J. I. Kramer,[bce]

[a] Utrecht University, Department of Earth Sciences, The Netherlands
[b] Delft University of Technology, Department of Water Management, The Netherlands
[c] Waternet, Amsterdam, The Netherlands
[d] Omnisys, Hoevelaken, The Netherlands
[e] Queen Mary University of London, Department of Chemical Engineering, UK


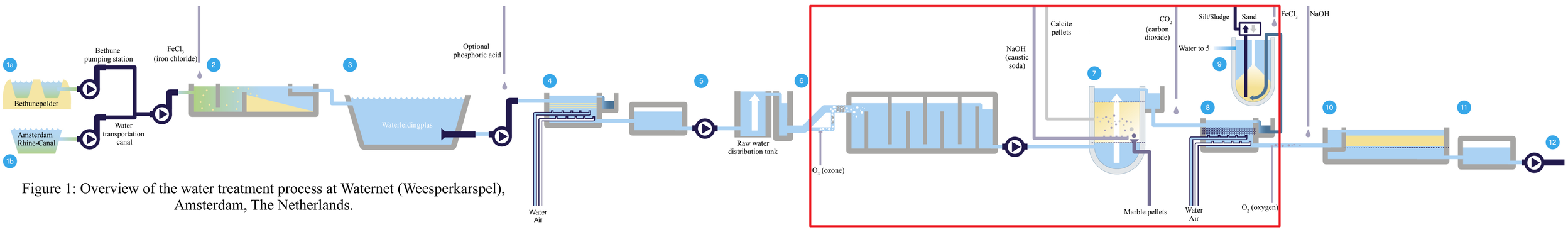


Figure 1: Overview of the water treatment process at Waternet (Weesperkarspel), Amsterdam, The Netherlands.

## 1. Introduction

We developed a new mechanistic model that predicts calcium removal rates in drinking water through pellet softening, carry-over of fine particles, and the saturation of the bed in subsequent treatment step. Our model relies solely on the values for the linear velocity in the softening reactor ($v_s$), (average) particle size ($d_p$), temperature ($T$) and saturation index with respect to calcite ($SI_{cal}$). Validation of our model was carried out with our own experiments and real-time data. The implementation of our model enabled the derivation of key performance indicators (KPIs) to optimize the softening process, chemical usage, and reactor design, steering the drinking water treatment towards a more circular and environmentally sustainable process.

## 2. Conclusions & Recommendations

- **Innovation:** A multidisciplanary approach is required for modelling of water softening treatment practices.
- **Optimization:** Understanding the consequences of preceding treatment steps on softening as well as the role of softening on subsequent treatment processes is crucial for global optimization of the model.
- **Validation:** Experiments are important to validate our mechanistic model, as well as real-time data from the treatment plant.
- **Reactor Design:** The fluidized bed in a pellet reactor should have a minimum height of 6 m, so softening can be practiced more flexible, to make it a more efficient process throughout the year with ever-changing process conditions.
- **Control:** A combination of pH- and EC-driven control may be a better indicator to make the softening treatment step more flexible.

## 3. Modeling Methods & Results

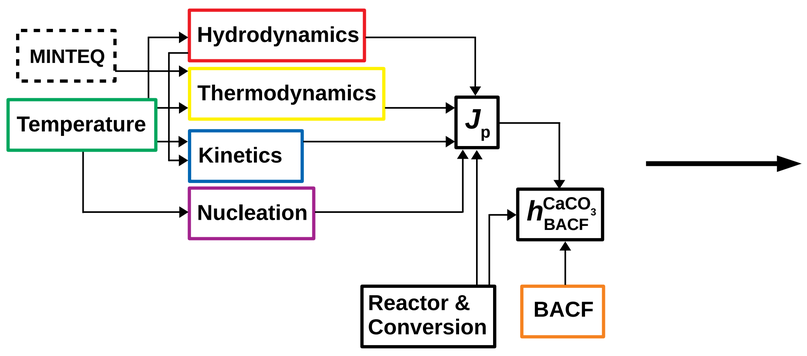


$$J_p + h^{CaCO_3}_{BACF} = J_c + J_n + f(\tau_r) J_n \frac{M_W\ \varepsilon_{BACF} \frac{A_{soft}}{A_{BACF}}\ v_s}{\rho^{fines}} =$$

$$K_c\ SSA_W\ TCCCP + K_n \frac{V_c}{V_m}\ SI_{cal}\ \exp\left[\frac{-B_n}{\ln\left[SI_{cal}\right]^2}\right] +$$

$$f(\tau_r)\left[K_n \frac{V_c}{V_m}\ SI_{cal}\ \exp\left[\frac{-B_n}{\ln\left[SI_{cal}\right]^2}\right]\right] \frac{M_W\ \varepsilon_{BACF} \frac{A_{soft}}{A_{BACF}}\ v_s}{\rho^{fines}}$$

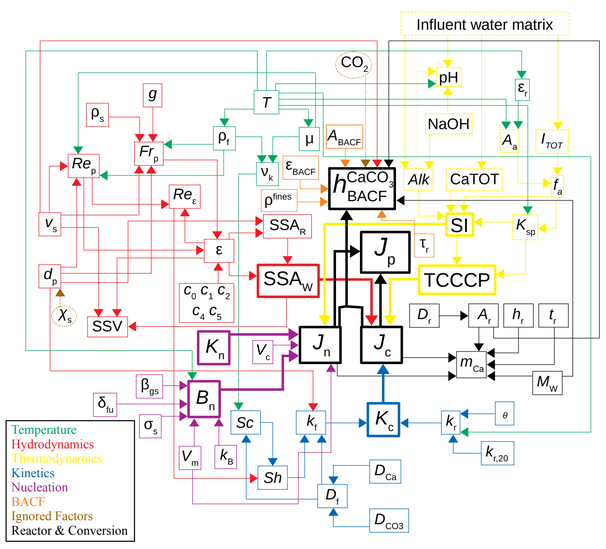


| Independent Variables | Dependent Variables: Temperature $\rho_f$ | $\mu$ | $\nu_k$ | $\varepsilon_r$ | Hydrodynamics $Re_p$ | $Re_\varepsilon$ | $Fr_p$ | $\varepsilon$ | $SSA_R$ | $SSA_W$ | SSV | Thermodynamics $K_{sp}$ | $A_a$ | $f_a$ | TCCCP | Mass transfer $k_r$ | $k_f$ | Sc | $K_c$ | Sh | Nucleation $B_n$ | Resultants $J_n$ | $J_c$ | $J_p$ | $h^{CaCO_3}_{BACF}$ |
|---|---|---|---|---|---|---|---|---|---|---|---|---|---|---|---|---|---|---|---|---|---|---|---|---|---|
| $T$ | m | - | - | - | + | + | = | - | + | + | + | - | + | - | - | + | + | - | + | + | - | + | + | + | + |
| $v_s$ | | | | | + | + | + | + | - | - | m | | | | | | + | | + | + | | | + | o | + |
| $d_p$ | | | | | + | m | - | - | m | m | m | | | | | | - | | - | m | | | - | - | |
| $SI_{cal}$ | | | | | | | | | | | | | | | + | | | | | | | + | + | + | + |

Fig. 2: Model framework and principles

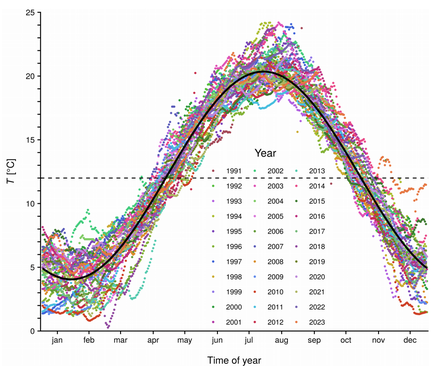


Fig. 3: Long-term temperature data.

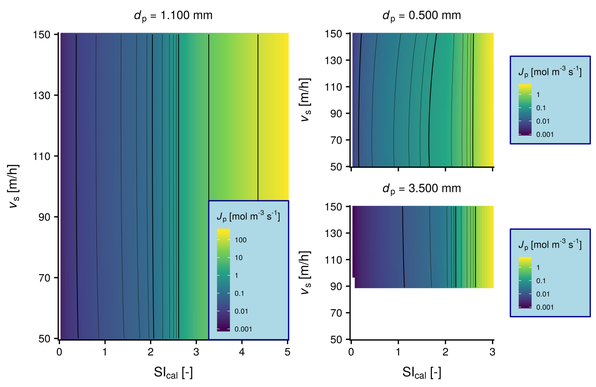


Fig. 4: Total calcium removal rate $J_p$.

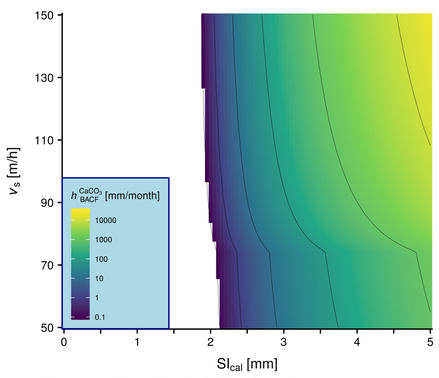


Fig. 5: BACF bed saturation height velocity $h^{CaCO_3}_{BACF}$.

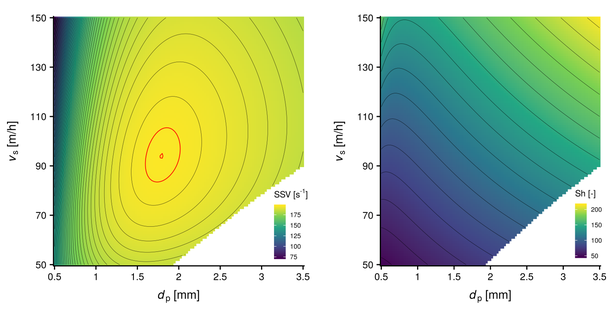


Fig. 6: Key performance indicators (KPI's) showing optimal hydrodynamic and (kinetic) mass transfer conditions for heterogeneous crystallization.

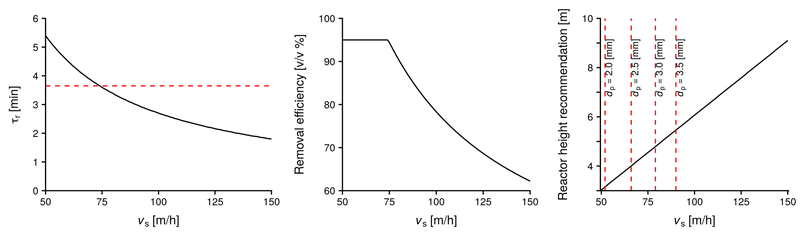


Fig. 7: Optimized reactor design for maximum efficiency.

## 4. Experimental Methods & Results

Fig. 8: Fluidized bed reactor set-up during experiments.

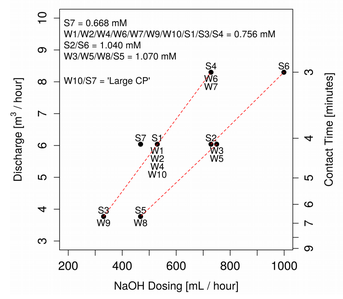


Fig. 9: Experimental conditions for all performed fluidized bed experiments.

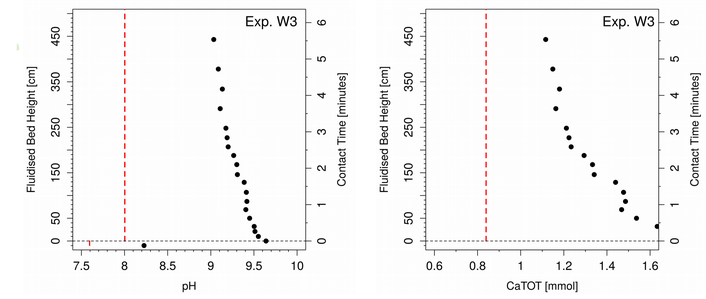


Fig. 10: pH and CaTOT versus fluidized bed height for experiment W3.

Water samples taken, for SEM crystallite analyses, when:
- No bed
- Minor bed (± 30 cm)
- Medium bed (± 125 cm)
- Full bed (± 370 cm)

Calcite pellet samples taken, for estimation of pellet growth during experiment, at:
- Bottom (0 - 20 cm)
- Midway (± 125 cm)
- Top (± 370 cm)

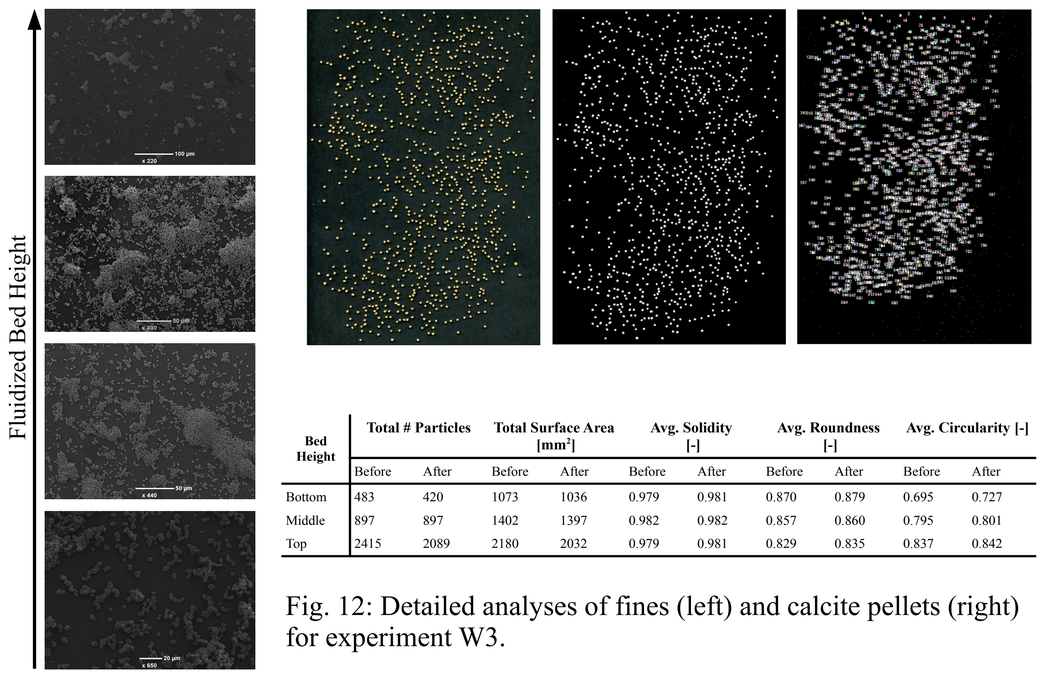


| Bed Height | Total # Particles Before | After | Total Surface Area [mm²] Before | After | Avg. Solidity [-] Before | After | Avg. Roundness [-] Before | After | Avg. Circularity [-] Before | After |
|---|---|---|---|---|---|---|---|---|---|---|
| Bottom | 483 | 420 | 1073 | 1036 | 0.979 | 0.981 | 0.870 | 0.879 | 0.695 | 0.727 |
| Middle | 897 | 897 | 1402 | 1397 | 0.982 | 0.982 | 0.857 | 0.860 | 0.795 | 0.801 |
| Top | 2415 | 2089 | 2180 | 2032 | 0.979 | 0.981 | 0.829 | 0.835 | 0.837 | 0.842 |

Fig. 12: Detailed analyses of fines (left) and calcite pellets (right) for experiment W3.

## 5. References


Graveland, A. J.; Van Dijk, J. C.; de Moel, P. J.; Oomen, J. H. C. M. Developments in water softening by means of pellet reactors. *American Water Works Association* **1983**, *75*(12), 619-625.

Schetters, M. J. A.; van der Hoek, J. P.; Kramer, O. J. I.; Kors, L. J.; Palmen, L. J.; Hofs, B.; Koppers, H. Circular economy in drinking water treatment: reuse of ground pellets as seeding material in the pellet-softening process. *Water Science and Technology* **2015**, *71*(4), 479-486.

Gustafsson, J. P. VisualMinteqv3.1, a free equilibrium speciation model; KTH, Department of Land and Water Resources Engineering: Stockholm, Sweden, 2013. Available at: vminteq.lwr.kth.se

Kramer, O. J. I. Hydraulic modelling of liquid-solid fluidisation in drinking water treatment processes, Doctoral Dissertation, Delft University of Technology, 2021.

Ferreira, T.; Rasband, W. S. ImageJ user guide – IJ 1.46, 2010-2012. Available at: imagej.nih.gov/ij/docs/guide/


## 6. Contact Details


Let's discuss research collaborations or professional opportunities
**sergejseepma@gmail.com**

Whether your focus is in water tech, pharmaceuticals, oil & gas, or any field where advanced chemistry, scaling, or crystallization play a crucial role, I'm keen to see how my research and skills in R&D can help push your projects to the next level.

ORCID 0000-0002-90333-8528

LinkedIn


NAC NEDERLANDS AARDWETENSCHAPPELIJK CONGRES